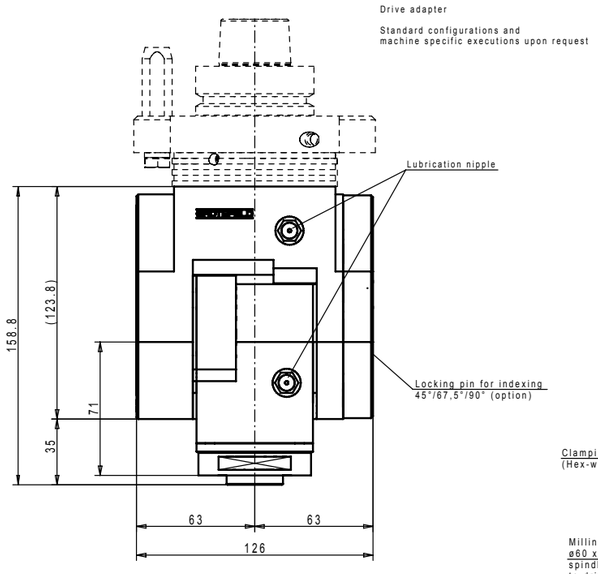

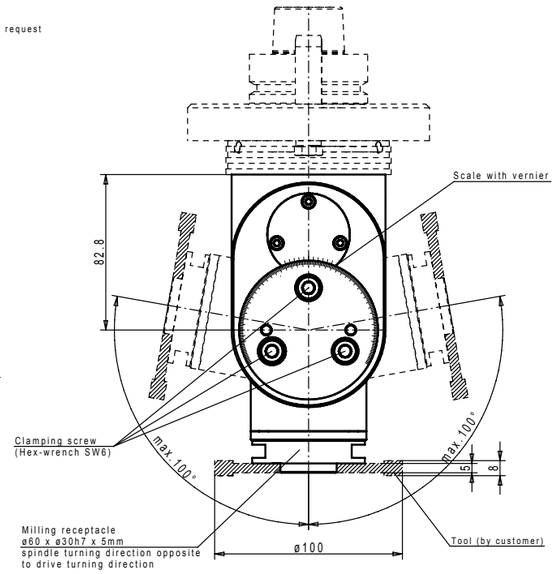

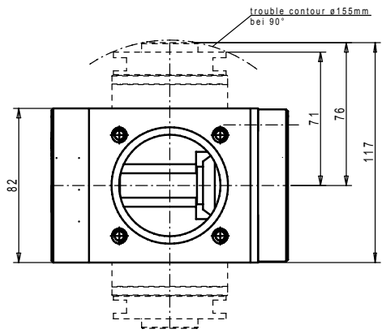

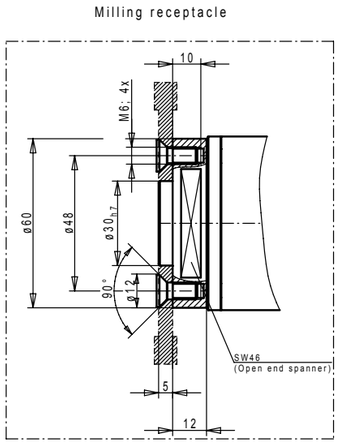

Technical features

Item Id.	EP-032540
drive turning direction	R.H./L.H.
drive speed max.	permanent operation 7.755 rpm
drive speed max.	interval operation 8.726 rpm
number of spindles	1
spindle position	horizontal to vertical adjustable by scale (0°- 100°)
tool receptacle	Ø60 x ø30h7 x 5 mm
gear ratio	1 : 2,06 – toothed belt and gear drive
turning direction of tool receptacle	1x opposite to drive turning direction
spindle speed max.	permanent operation 16.000 rpm
spindle speed max.	interval operation 18.000 rpm
drive capacity	3,0 kW
weight without drive adapter	approx. 3,00 kg

Optional accessories:

Indexing 45°/67,5°/90°	Item Id. 032549
Hex-wrench SW4	Item Id. 138040
Hex-wrench SW6	Item Id. 138060
Open end spanner SW 46 flat	Item Id. 131247
Lubrication press	Item Id. 980003

The angular milling heads G25-1.1-F have a machining spindle continuously adjustable by scale. The adjustment range is 0° (vertical) up to 100° to both sides. The spindle turning direction is opposite to drive turning direction. The drive speed is transmitted in a ratio of 1:2,06 to the tool receptacle. The maximum spindle speed is 18,000 rpm in interval operation.
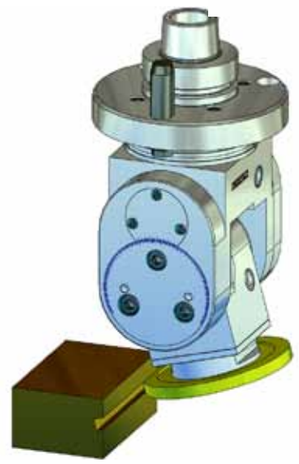
Variants on demand!